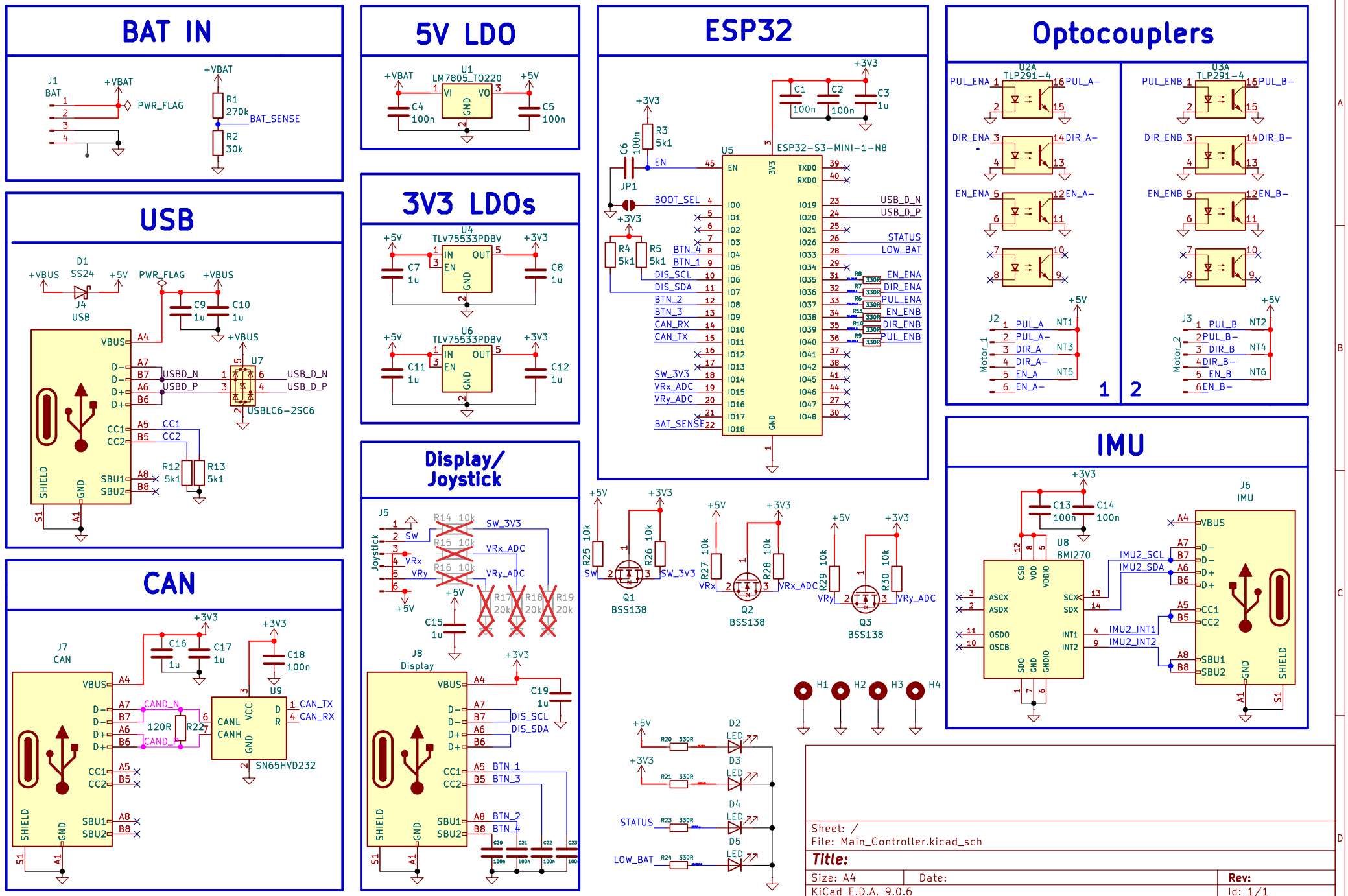
BAT IN
J1
BAT
+VBAT
PWR_FLAG
R1
270k
BAT_SENSE
R2
30k
5V LDO
U1
LM7805_TO220
VI
VO
GND
C4
100n
C5
100n
3V3 LDOs
U4
TLV75533PDBV
IN
OUT
EN
C7
1u
C8
1u
U6
TLV75533PDBV
C11
1u
C12
1u
ESP32
U5
ESP32-S3-MINI-1-N8
C1
100n
C2
100n
C3
1u
R3
5k1
C6
100n
JP1
BOOT_SEL
R4
5k1
R5
5k1
BTN_4
BTN_1
DIS_SCL
DIS_SDA
BTN_2
BTN_3
CAN_RX
CAN_TX
SW_3V3
VRx_ADC
VRy_ADC
BAT_SENSE
USB_D_N
USB_D_P
STATUS
LOW_BAT
EN_ENA
DIR_ENA
PUL_ENA
EN_ENB
DIR_ENB
PUL_ENB
Optocouplers
U2A
TLP291-4
U3A
TLP291-4
PUL_ENA
DIR_ENA
EN_ENA
PUL_A-
DIR_A-
EN_A-
PUL_ENB
DIR_ENB
EN_ENB
PUL_B-
DIR_B-
EN_B-
J2
Motor_1
PUL_A
PUL_A-
DIR_A
DIR_A-
EN_A
EN_A-
NT1
NT3
NT5
J3
Motor_2
PUL_B
PUL_B-
DIR_B
DIR_B-
EN_B
EN_B-
NT2
NT4
NT6
1
2
USB
D1
SS24
J4
USB
+VBUS
+5V
PWR_FLAG
C9
1u
C10
1u
U7
USBLC6-2SC6
USBD_N
USBD_P
USB_D_N
USB_D_P
CC1
CC2
R12
5k1
R13
5k1
SHIELD
GND
IMU
J6
IMU
U8
BMI270
C13
100n
C14
100n
IMU2_SCL
IMU2_SDA
IMU2_INT1
IMU2_INT2
CAN
J7
CAN
C16
1u
C17
1u
C18
100n
U9
SN65HVD232
CAND_N
CAND_P
120R
R22
CAN_TX
CAN_RX
Display/
Joystick
J5
Joystick
R14 10k
R15 10k
R16 10k
R17 20k
R18 20k
R19 20k
SW_3V3
VRx_ADC
VRy_ADC
C15
1u
J8
Display
C19
1u
DIS_SCL
DIS_SDA
BTN_1
BTN_3
BTN_2
BTN_4
R25 10k
R26 10k
Q1
BSS138
R27 10k
R28 10k
Q2
BSS138
R29 10k
R30 10k
Q3
BSS138
H1
H2
H3
H4
D2
D3
D4
D5
LED
R20 330R
R21 330R
R23 330R
R24 330R
STATUS
LOW_BAT
Sheet: /
File: Main_Controller.kicad_sch
Title:
Size: A4
Date:
Rev:
KiCad E.D.A. 9.0.6
Id: 1/1